oerlikon
fairfield

Torque-Hub® Planetary Final Drive W6CG Series Service Manual

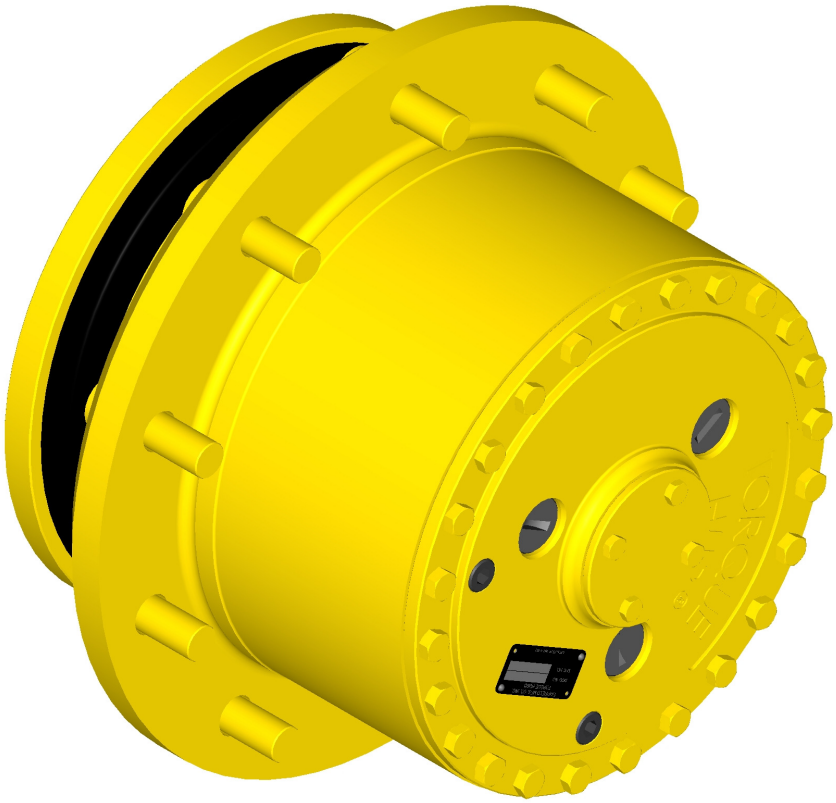

Rev 03/07/13

While every precaution has been taken in the preparation of this document, Fairfield Manufacturing Co. Inc. assumes no liability with respect to the use of the documentation described herein, or for any act or omission of Fairfield Manufacturing Co. Inc. concerning this documentation. Torque-Hub® is a registered trademark of Fairfield Manufacturing Co. Inc.

Features and specifications are subject to change without notice.

Planetary Final Drive Service Manual
Content

	Introduction	04
	Roll and Leak Test	05
	Tightening and Torquing Bolts	07
	Lubrication Information	08
Disassembly Instructions	Main Disassembly	10
	Output Carrier Disassembly	12
	Input Carrier Disassembly	14
	Housing-Spindle Disassembly	15
	Input Coupling Disassembly	17
Assembly Instructions	Input Carrier Subassembly	20
	Output Carrier Subassembly	22
	Input Coupling Subassembly	24
	Housing-Spindle Subassembly	25
	Main Assembly	27
	Assembly Drawing	29
	Parts List	30
	Assembly Tools	32
General Information	Contact Information	41

Planetary Final Drive Service Manual
Introduction

This manual is a step-by-step guide to the disassembly and assembly of the W6CG Torque-Hub® units. It is designed for the customer or mechanic who is repairing this particular Torque-Hub® model.

Users of this manual should note that each part mentioned is followed by an identification number enclosed in parentheses. These part numbers may be referred to in the Parts List and Assembly Drawing sections of this manual.

Specialized tools used to assemble this unit are noted in the assembly procedures and diagrammed in the Assembly Tools section.

Users should familiarize themselves with the procedures for roll and leak testing, as well as bolt tightening and torquing found on the following three pages before starting any repairs.

Standard safety practices should be followed during the disassembly and assembly procedures described. Safety glasses and safety shoes should be worn, and heavy, heat resistant gloves should be used when handling heated components. Be especially alert when you see the word **CAUTION**. This indicates that a particular operation could cause personal injury if not performed properly or if certain safety procedures are not followed. The word **NOTE** is used to bring attention to certain procedures or helpful hints that will aid in the disassembly and assembly process.

Planetary Final Drive Service Manual
Roll and Leak Test

Torque-Hub® units should always be roll and leak tested before disassembly (if possible) and after assembly to make sure the unit's gears, bearings and seals are working properly. The following information briefly outlines what to look for when performing these tests.

The Roll Test

The purpose of the roll test is to determine if the unit's gears are rotating consistently, easily and properly. It should be able to rotate the gears in the unit applying *constant* force to the roll checker. If more drag is felt in the gears only at certain points, then the gears are not rolling consistently and easily and should be examined for improper installation or defects. Some gear packages roll with more difficulty than others. Do not be concerned if the gears in the unit seem to roll hard as long as they roll with *consistency*. Rotate the gearbox both clockwise and counterclockwise the same number of turns as the ratio of the unit. The gearbox ratio is the same number as the last three numbers on the ID tag.

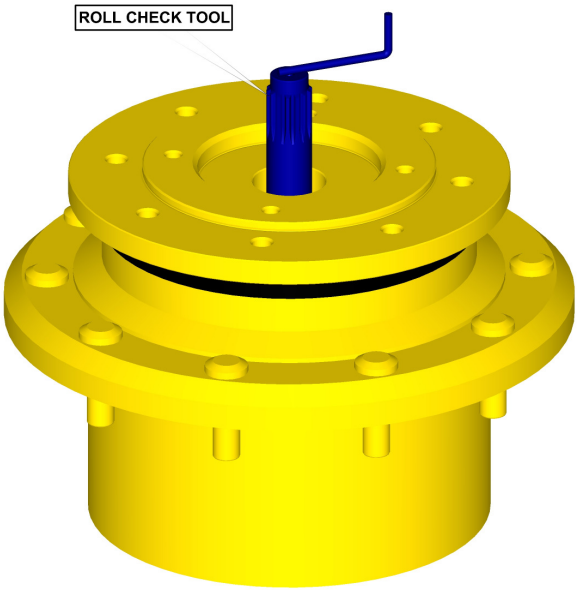

Model Code	Roll Test Tool
W6CGxxxxxxxx	T223989

Continued on Next Page

The Leak Test

The purpose of a leak test is to make sure the unit is airtight. The unit has a leak if the pressure gauge reading on your leak check fitting starts to fall after the gearbox has been pressurized and allowed to equalize. Leaks will most likely occur at the pipe plugs, the main seal or wherever o-rings or gaskets are located. The exact location of a leak can usually be detected by brushing a soap and water solution around the main seal and where the o-rings or gaskets meet on the exterior of the unit and then checking for air bubbles. If a leak is detected in a seal, o-ring or gasket, the part must be replaced and the unit rechecked. Leak test at 10 psi for 20 minutes.

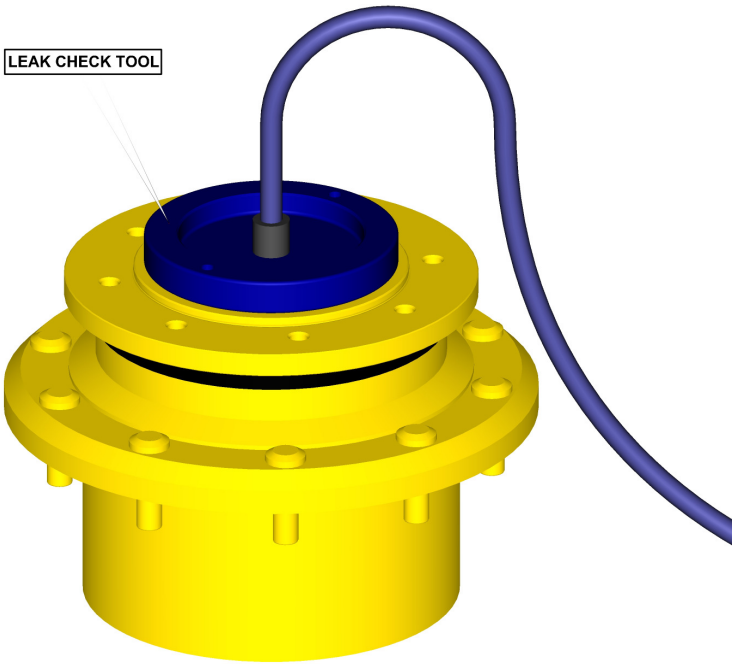

Model Code	Leak Test Tool
W6CGxxxxxxxx	T170237

Planetary Final Drive Service Manual
Tightening and Torquing Bolts

If an air impact wrench is used to tighten bolts, extreme care should be taken to ensure the bolts are not tightened beyond their specified torque. The following steps describe how to tighten and torque bolts or socket head cap screws in a bolt circle.

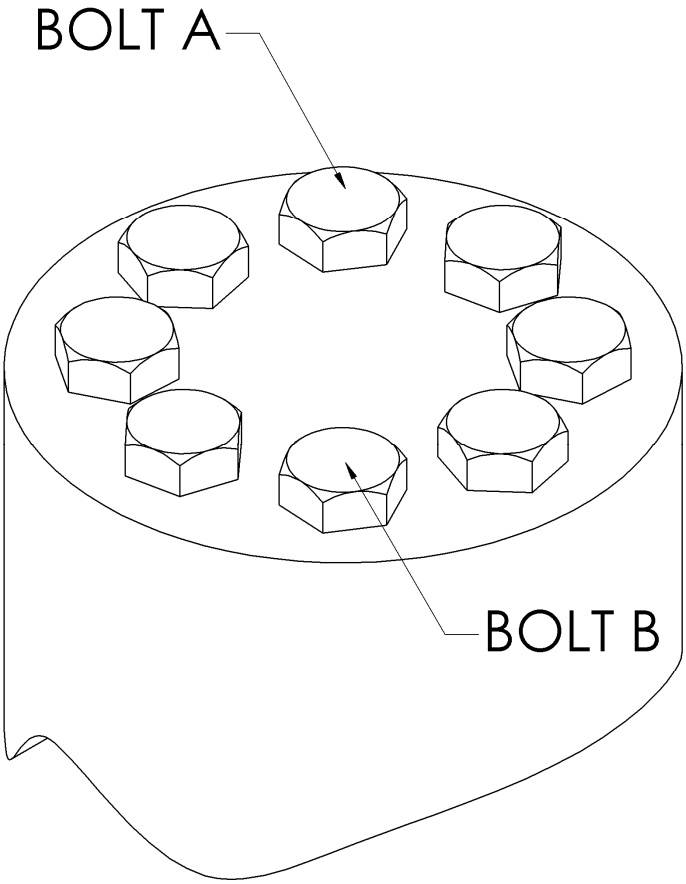

1. Tighten (but do not torque) bolt “A” until snug.
2. Go to the opposite side of the bolt circle and tighten bolt “B” until equally snug.
3. Crisscross around the bolt circle and tighten the remaining bolts.
4. Use a torque wrench to apply the specified torque to bolt “A.”
5. Using the same sequence, crisscross around the bolt circle and apply an equal torque to the remaining bolts.

Planetary Final Drive Service Manual
Lubrication Information

General Properties

The lubricant used in most Torque-Hub® drives should be petroleum-based gear fluid containing anti-oxidation, anti-foaming and extreme pressure additives. The lubricant should have a minimum viscosity index of 95 cst and maintain a minimum viscosity of 40 cst under normal operating conditions. Some applications require special considerations; consult the machine manufacturer and Oerlikon Fairfield for more additional information.

The table below lists the recommended viscosities for various ambient operating temperatures. These recommendations are based on temperature rise of 50° to 100°F at normal operating conditions.

	Differential Planetary		**Simple Planetary**	
Ambient Temperature	ISO Index	AGMA Lubricant Number	ISO Index	AGMA Lubricant Number
-40° to -5° F(1)	VG100	3EP	VG100	3EP
-5° to 40° F	VG150	4EP	VG100	3EP
40° to105° F	VG220/VG320	5EP/6EP	VG150/VG220	4EP/5EP
105° to 150° F(2)	VG460	7EP	VG320	6EP

Footnotes

1. For operation in this ambient temperature range, synthetic oil is recommended with a pour point of 10°F lower than the minimum ambient temperature.
2. For operation in this ambient temperature range, synthetic oil is recommended for proper lubricant life at elevated temperatures.

Maintenance

Oil amounts for each series of Torque-Hub® drives are indicated in the appropriate series literature. An initial oil change should be made after the first 50 hours of operation. Subsequent oil changes should be made at 1,000 hour intervals or annually, whichever comes first.

Oil temperatures should be not higher than 160° to 180°F for continuous operation, and no higher than 200°F for intermittent operation. For special applications, high horsepower, high speeds or wide temperature changes, please consult Oerlikon Fairfield.

Oil Fill Level

When the Torque-Hub® unit is mounted horizontally, unless otherwise specified, the gearbox should be filled half-full of oil. Consult the appropriate series literature for approximate fill volumes. Vertically mounted Torque-Hub® units may require special lubrication procedures. Please contact Oerlikon Fairfield for vertically mounted applications.

DISASSEMBLY

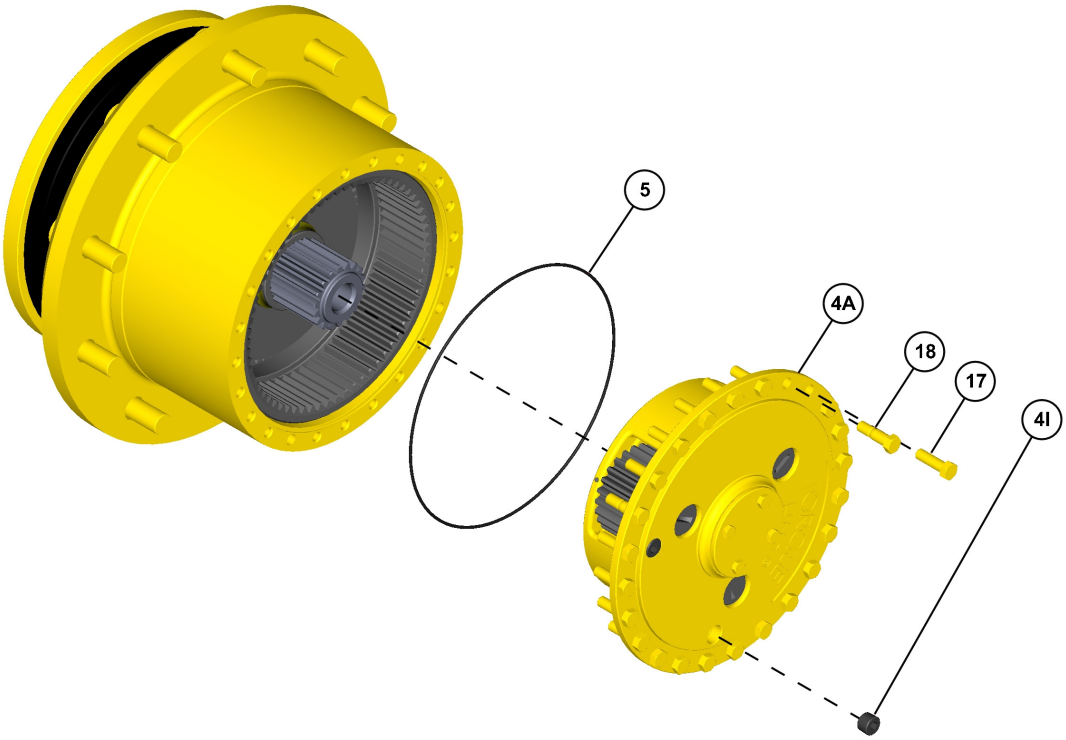

1. Perform a roll check and leak check prior to disassembling the unit.
2. Remove two magnetic Pipe Plugs (4I) and drain the oil out of the gearbox.

   NOTE: Record the condition and volume of the oil.
3. Remove four Shoulder Bolts (18) and twenty Hexagonal Bolts (17) from the Output Carrier (4A).
4. Lift the Output Carrier Subassembly (4A) off of the unit.
5. Remove the O-Ring (5) from the unit. Discard the O-Ring.

Continued on Next Page

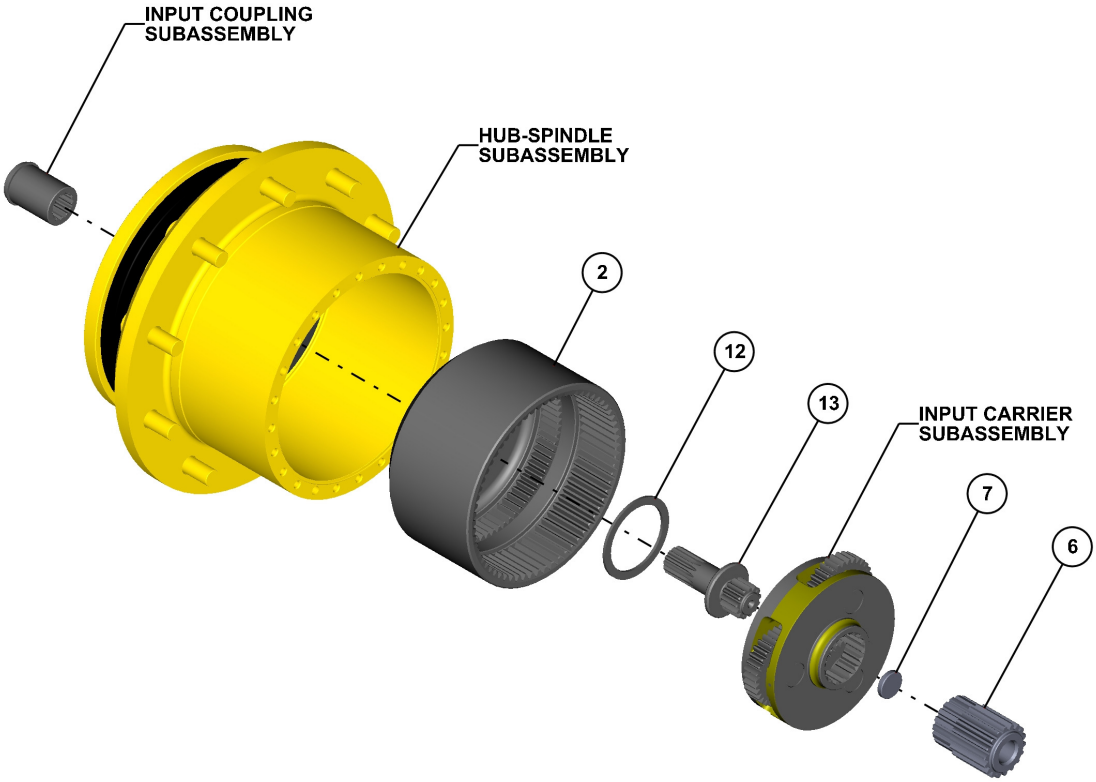

6. Remove Sun Gear (6) from Input Carrier Subassembly.

7. If necessary, remove Input Spacer (7) from the bore of Sun Gear (6).

8. Lift out the Input Carrier Subassembly from Internal Gear (2).

9. Remove the Input Shaft (13) out of the Spindle (1A).

10. Remove Thrust Washer (12) from the Internal Gear (2).

11. Remove Internal Gear (2) from Hub Spindle Subassembly.

12. Remove Input Coupling Subassembly from the Hub-Spindle Subassembly.

This concludes the Main Disassembly.

Planetary Final Drive Service Manual

Output Carrier Disassembly

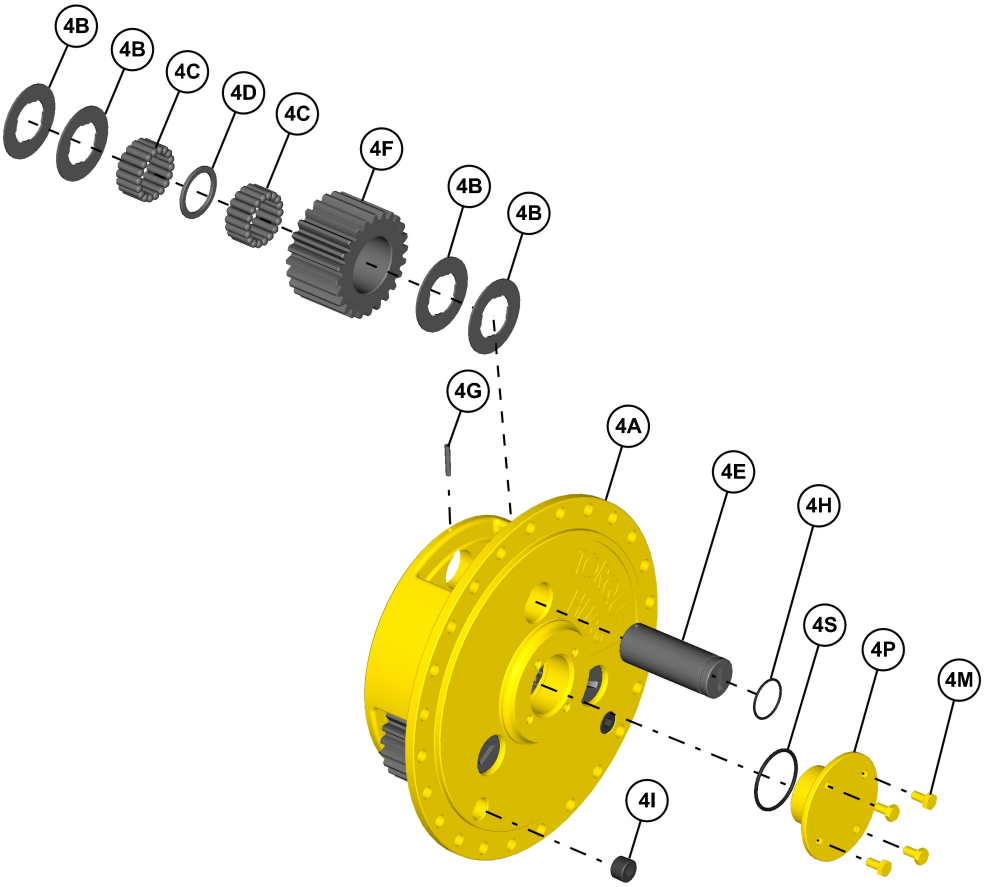

1. Drive Planet Shaft (4E) out of the planet shaft holes; forcing the Roll Pin (4G) to shear off.

2. Hold on to the Planet Gear (4F) and push the Planet Shaft (4E) out of the Carrier (4A). The Thrust Washers (4B) will slide off the shaft as it is removed.

3. Remove O-Ring (4H) from the slot of the Planet Shaft (4E) and discard O-ring.

4. Using a hammer and punch drive the Roll Pin (4G) out of the Planet Shaft (4E) and Carrier (4A).

5. Remove first set of Needle Bearings (4C) from the inside of the Planet Gear (4F).

6. Remove Thrust Washer (4D) from Planet Gear (4F).

7. Remove second set of Needle Bearings (4C) from the inside of the Planet Gear (4F).

8. Repeat steps 1-7 for the remaining two Planet Gears (4F).

9. Remove four Hexagonal Bolts (4M) from the Cover Cap (4P).

Continued on Next Page

10. Remove Cover Cap (4P) from the Carrier (4A).

11. Remove O-Ring (4S) from the flange of Cover Cap (4P) and discard it.

This concludes the Output Carrier Disassembly.

Input Carrier Disassembly

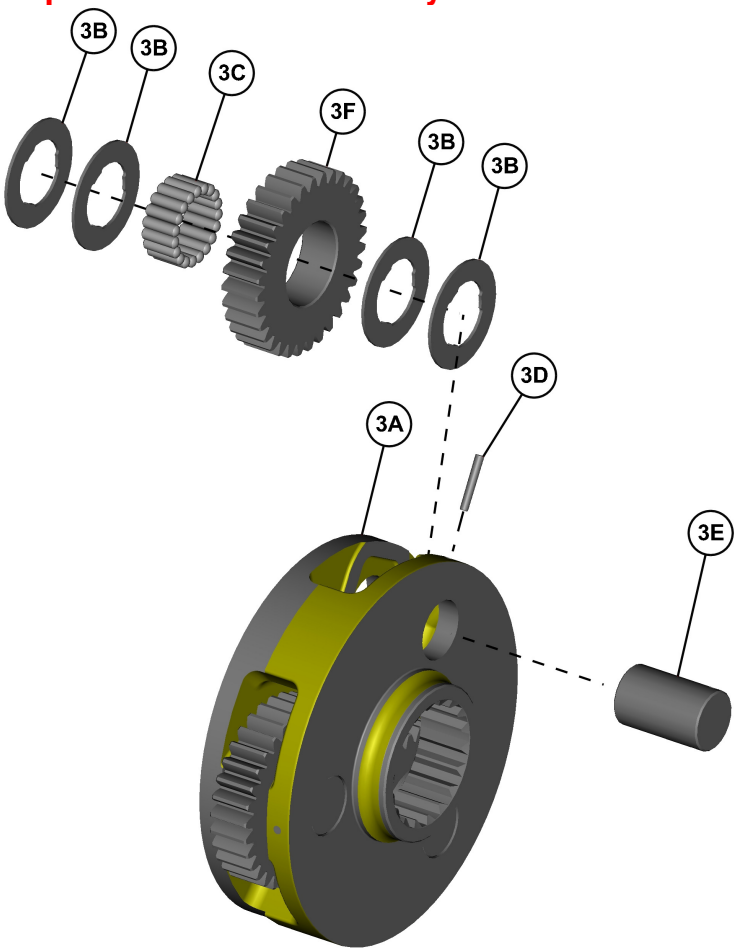

1. Drive Planet Shaft (3E) out of the planet shaft holes; forcing the Roll Pin (3D) to sheer off.

2. Hold on to the Planet Gear (3F) and push the Planet Shaft (3E) out of the Carrier (3A). The Thrust Washers (3B) will slide off the shaft as it is removed.

3. Using a hammer and punch drive the Roll Pin (3D) out of the Planet Shaft (3E) and Carrier (3A).

4. Remove Thrust Washer (3B) from internal groove of the Carrier (3A).

5. Remove Planet Gear Subassembly from the Input Carrier (3A).

6. Remove Needle Bearings (3C) from the Planet Gear (3F).

7. Repeat the Steps 1 to 6 for the remaining two Planet Gears (3F).

This concludes the Input Carrier Disassembly.

Housing-Spindle Disassembly

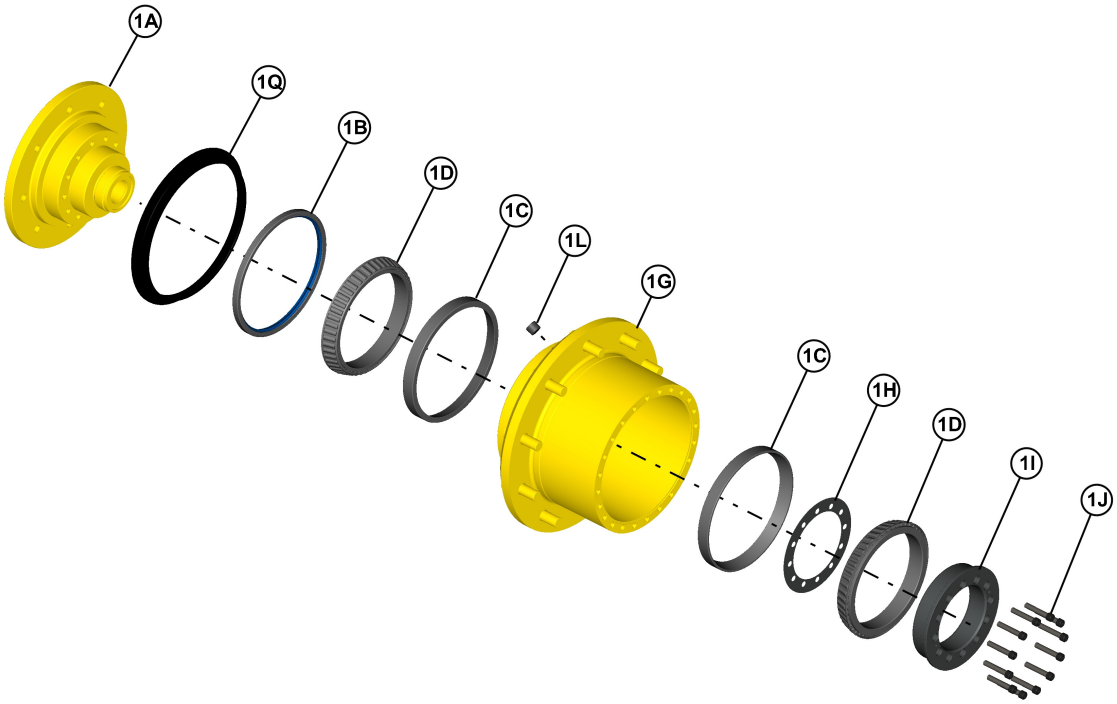

1. Set the unit on a bench so that the Spindle (1A) flange is down.
2. Remove the twelve Bolts (1J) from Spindle (1A) through the Bearing Carrier (1I).
3. Remove the Bearing Carrier (1I) from the Spindle (1A).
4. Remove the Bearing Cone (1D) from the Bearing Carrier (1I).

   CAUTION: The Shim edges are sharp; wear gloves when handling or installing Shims to prevent injury.

5. Remove the Shims (1H) out of the Housing (1G).

Continued on Next Page

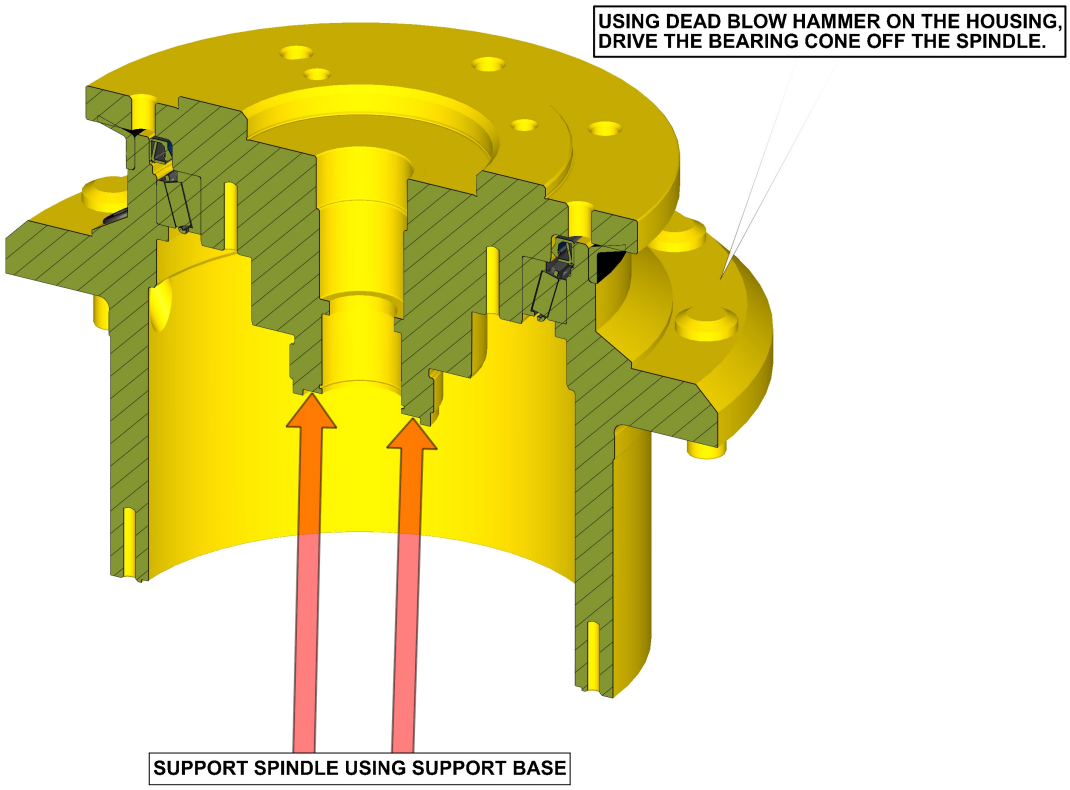

6. Turn over the unit and carefully place the unit on a support base until the Spindle (1A) rests on it. Ensure there is enough gap to lower the Housing (1G) down.

7. Use a dead blow hammer on the Housing (1G) flange to drive the Housing (1G) off of the Spindle (1A).

8. Lift the Spindle (1A) out of the Housing (1G).

9. Remove Boot Seal (1Q) from the Spindle (1A).

10. Remove Lip Seal (1B) from the Housing (1G).

11. Remove outboard Bearing cone (1D) from the Housing (1G).

12. Using a hammer and punch drive the inboard Bearing Cup (1C) out of the Housing (1G). Be careful not to damage the counter bore in the housing.

13. Turn the Housing (1G) over, drive the outboard Bearing Cup (1C) out of the Housing. Be careful not to damage the counter-bore in the housing.

14. Remove the two Pipe Plugs (1L) from the Housing (1G).

This concludes the Housing-Spindle Disassembly.

Input Coupling Disassembly

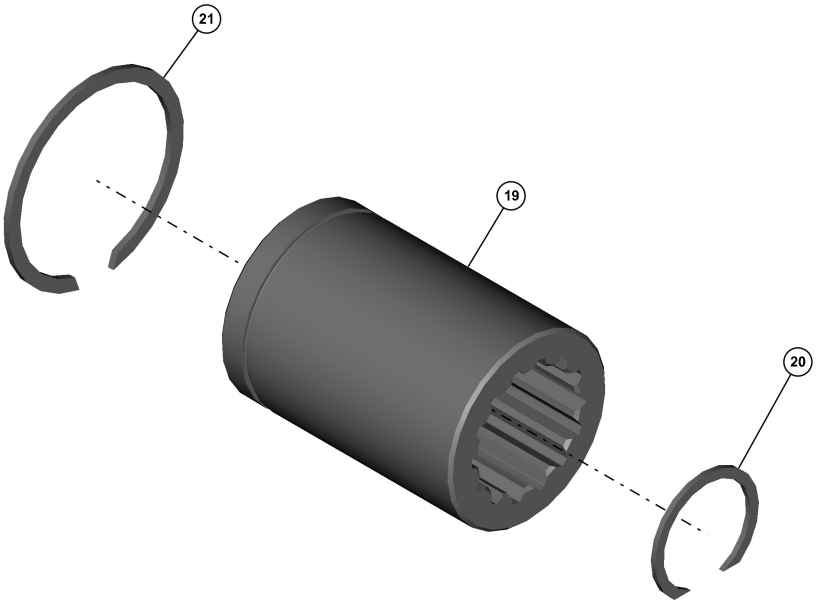

CAUTION: Safety glasses must be worn during this next steps.

1. Remove Internal Retaining Ring (20) from the groove Coupling (19).
2. Remove the Retaining Ring (21) from the groove of the Coupling (19).

This concludes the Carrier Disassembly (Brakes).

THIS PAGE

INTENTIONALLY

LEFT BLANK

ASSEMBLY

Input Carrier Subassembly

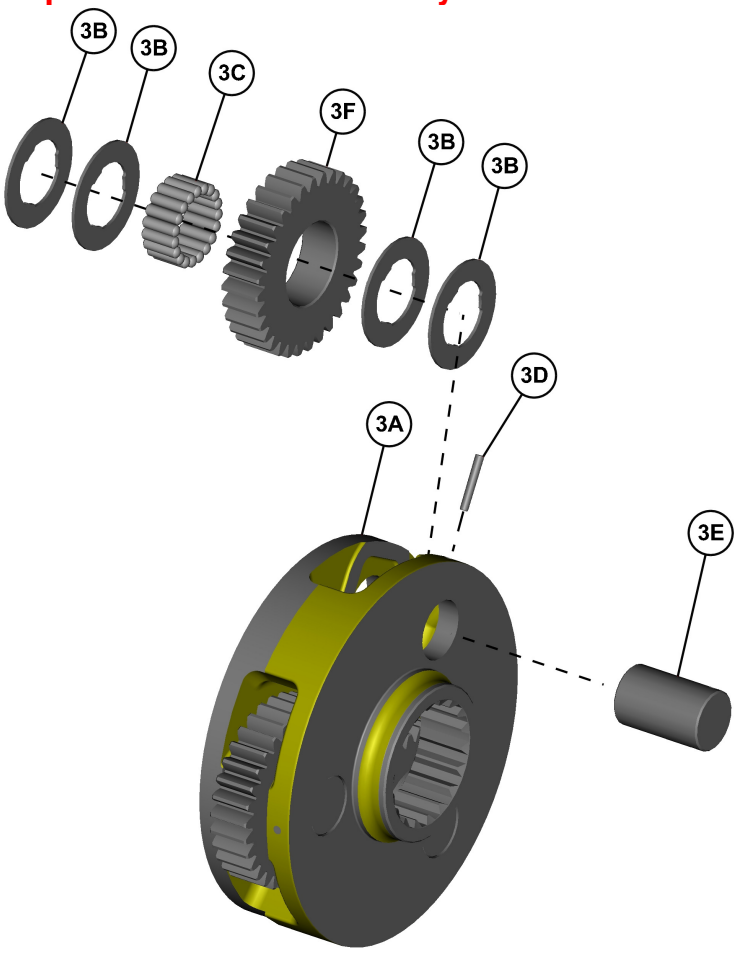

1. Apply a liberal coat of grease to the bore of the Planet Gear (3F). This will enable the Needle Rollers (3C) to be held in place during assembly.

2. Install Needle Rollers (3C) into the bore of the Planet Gear (3F).

   NOTE: The last roller installed must be installed end wise. That is, the end of the last roller must be placed in between the ends of the two rollers that form the space, and then slide parallel to the other rollers into place.

3. Place the Carrier (3A) into the tool fixture so that one of the roll pin holes is straight up.

4. Start Planet Shaft (3E), with end opposite roll pin hole first, through the planet shaft hole in Carrier (3A), making sure that the roll pin hole with the large chamfer in the planet shaft is straight up.

5. Grease and install two Thrust Washers (3B) onto the end of Planet Shaft (3E).

Continued on Next Page

6. Place the Planet Gear (3F) into position and push the Planet Shaft (3E) through the planet gear (3F) without going all the way through Carrier (3A).

7. Slide two more Thrust Washers (3B) between Planet Gear (3F) and Input Carrier (3A). Slide Planet Shaft (3E) through and into Input Carrier (3A).

8. Align the chamfered side of the Planet Shaft (3E) hole with the roll pin hole of the Input Carrier (3A) using a 1/8 inch punch.

9. Drive the Roll Pin (3D) into the roll pin hole in Carrier (3A) and into the Planet Shaft (3E) until the end of the roll pin is flush with the outside diameter of Carrier (3A).

10. Repeat steps 1 to 9 for the remaining two Planet Gears (3F).

This concludes the Input Carrier Subassembly.

Output Carrier Subassembly

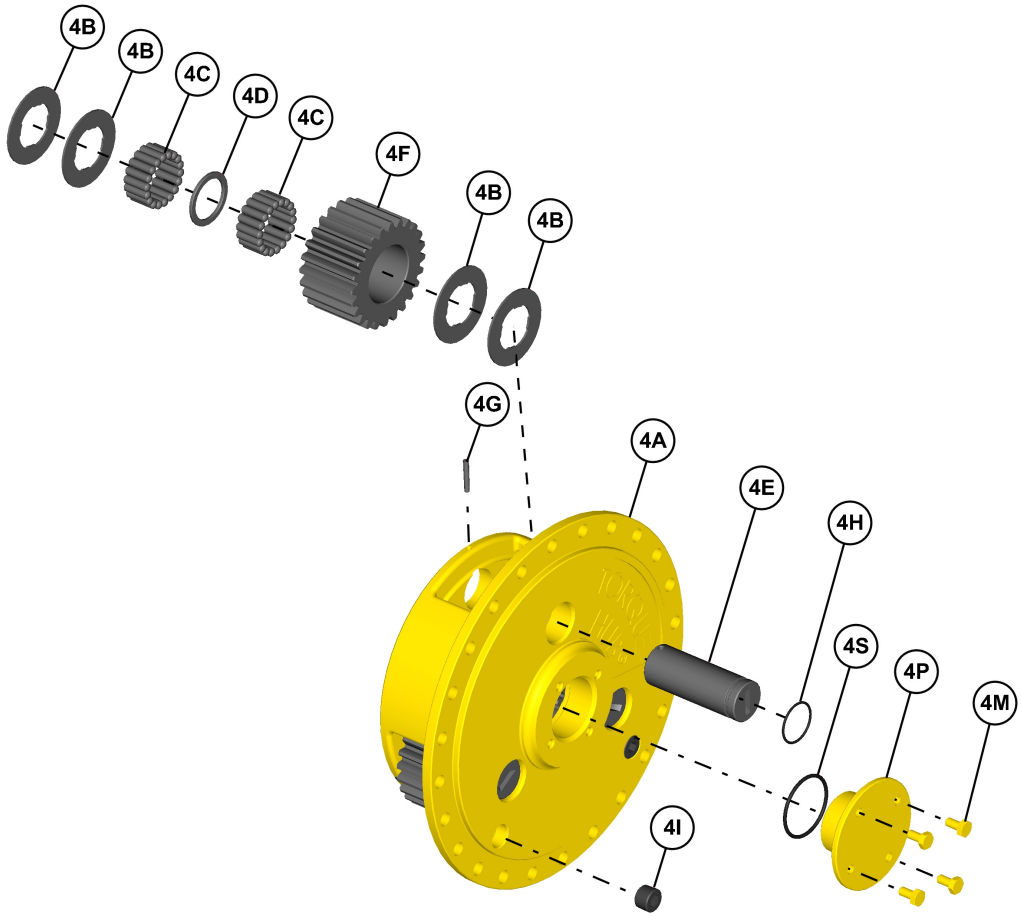

1. Apply a liberal coat of grease to the bore of the Planet Gear (4F). This will enable the Needle Rollers (4C) to be held in place during assembly.

2. Install Needle Rollers (4C) into the bore of the Planet Gears (4F).

   NOTE: The last roller installed must be installed end wise. That is, the end of the last roller must be placed in between the ends of the two rollers that form the space, and then slide parallel to the other rollers into place

3. Grease and install Thrust Washer (4D) into the bore of Planet Gear (4F) on top Needle Rollers (4C).

4. Install second set of Needle Rollers (4C) into the bore against Thrust Washer (4D) of the Planet Gear (4F).

5. Place the Carrier (4A) into the tool fixture so that one of the roll pin holes is straight up.

6. Grease O-Ring (4H) and install into groove in Planet Shaft (4E). Start Planet Shaft (4E), with end with roll pin hole first, through the planet shaft hole in Carrier (4A), making sure that the roll pin hole with the large chamfer in the planet shaft is straight up.

Continued on Next Page

7. Grease and install two Thrust Washers (4B) onto the end of Planet Shaft (4E).

8. Install the Planet Gear (4F) into position in Output Carrier (4A) and push Planet Shaft (4E) into Planet Gear (4F) without going all the way through.

9. Slide two more Thrust Washers (4B) between Planet Gear (4F) and Output Carrier (4A). Slide Planet Shaft (4E) through and into Output Carrier (4A). Be careful not to shear the O-Ring (4H).

10. Align the chamfered side of the Planet Shaft (4E) hole with the roll pin hole of the Output Carrier (4A) using a pin-punch.

11. Drive the Roll Pin (4G) through the Output Carrier (4A) and into the Planet Shaft (4E) until flush with Output Carrier (4A).

12. Repeat Steps 1 thru 11 for the installation of the remaining Planet Gears (4F).

13. Install O-ring (4S) onto the hub of the Cover Cap (4P) and against the flange.

14. Assemble Cover Cap (4P) into the Carrier (4A), align the holes in the flange with the holes in the Carrier (4A).

15. Install 4 Hex bolts (4M) through the Cover Cap (4P) into the Carrier (4A) and torque to 70-80 in-lbs.

16. Install Pipe Plugs (4I) into the Carrier (4A) using thread sealant.

This concludes the Output Carrier Subassembly.

Input Coupling Subassembly

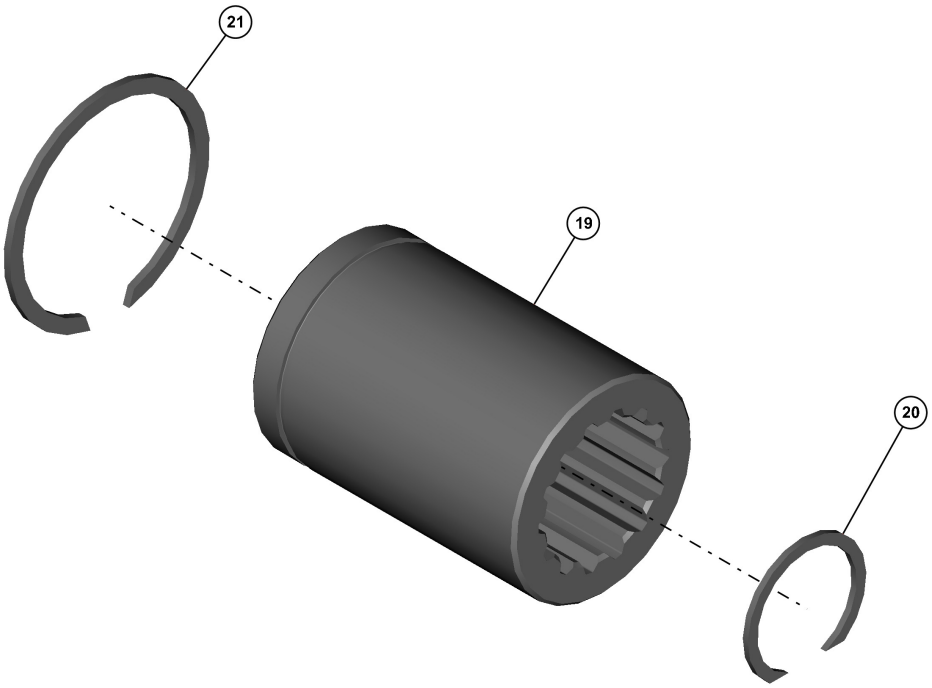

CAUTION: Safety glasses must be worn during these next steps.

1. Install External Retaining Ring (21) into groove of the Coupling (19).
2. Install Internal Retaining Ring (20) into the groove of the Coupling (19)

This concludes the Carrier Subassembly (Brakes).

Housing - Spindle Subassembly

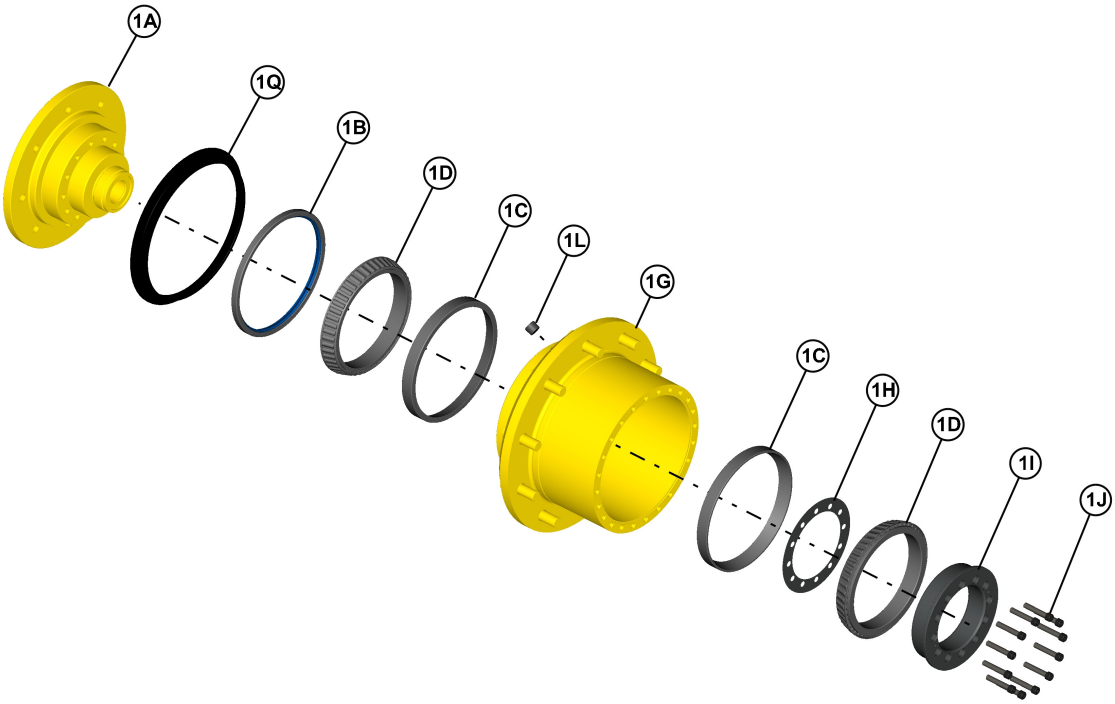

NOTE: Spray a light film of oil on all component parts during assembly. Spray a generous amount of oil on bearings during installation.

1. Place Hub (1G) on the table with long end up. Press one Bearing Cup (1C) into bearing counter bore of until seated against shoulder in housing. Use Tool T155655.

2. Turn Hub (1G) over and press Bearing Cup (1C) into bore until it bottoms out.

3. Place one Bearing Cone (1D) into the Bearing Cup (1C).

   NOTE: Generally seals should not be reused.

4. Install Seal (1B) into Hub (1G) until it flush with end of Hub (1G).

5. Assemble Seal Boot (1Q) onto the end of Hub (1G) outside diameter, if required, and grease the face of Seal Boot (1Q).

6. Press Bearing Cone (1D) onto Bearing Carrier (1I) until it bottoms on the flange of Bearing Carrier (1I).

Continued on Next Page

7. Place Spindle (1A) on the table with splined end up. Make sure that threaded hole in the Spindle (1A) in the face adjacent to splines, are clean and oil free. Oil the seal diameter with finger print oil. Be careful not to get oil into threaded hole in the Spindle (1A). Turn Hub-Bearing seal assembly over and lower onto Spindle (1A). Locate Bearing Cone onto the Spindle (1A) against shoulder.

BEARING SETUP

8. Place .Bearing Carrier (1I) and Bearing Cone (1D) onto Spindlle (1A) and Bearing Cup (1C). Use two Bolts (1J) in the holes next to small through holes. Torque Bolts (1J) to 35-40 ft-lbs. Use Loctite 263

9. Loosen the Bolts (1J) and re-torque to 150 in-lbs. Roll the Hub (1G). Roll the Hub and check the bolt torque. Re-torque to 150 in-lbs, if required.

10. Using a depth mic measure the distance from the surface of the Bearing Carrier (1I), adjacent to the Bolt counter bores through the small holes in the Bearing Carrier, down to the Spindle face record this length.

11. Disassemble the Bearing Carrier (1I) and Bearing Cone (1D) from the Spindle and measure the thickness of the Bearing Carrier (1I). Subtract the Bearing Carrier (1I) thickness from the distance measured in step 10 and add 0.0035 to this value. This is thickness required for Shim (1H).

12. Assemble the Shims (1H) onto Spindle (1A) with the Bearing Carrier (1I). Torque Bolts (1J) to 35-40 ft-lbs. Use Loctite 263

13. Install Pipe Plugs (1L) into Hub (1G) pipe plug holes using thread sealant.

This concludes the Housing-Spindle Subassembly.

Main Assembly

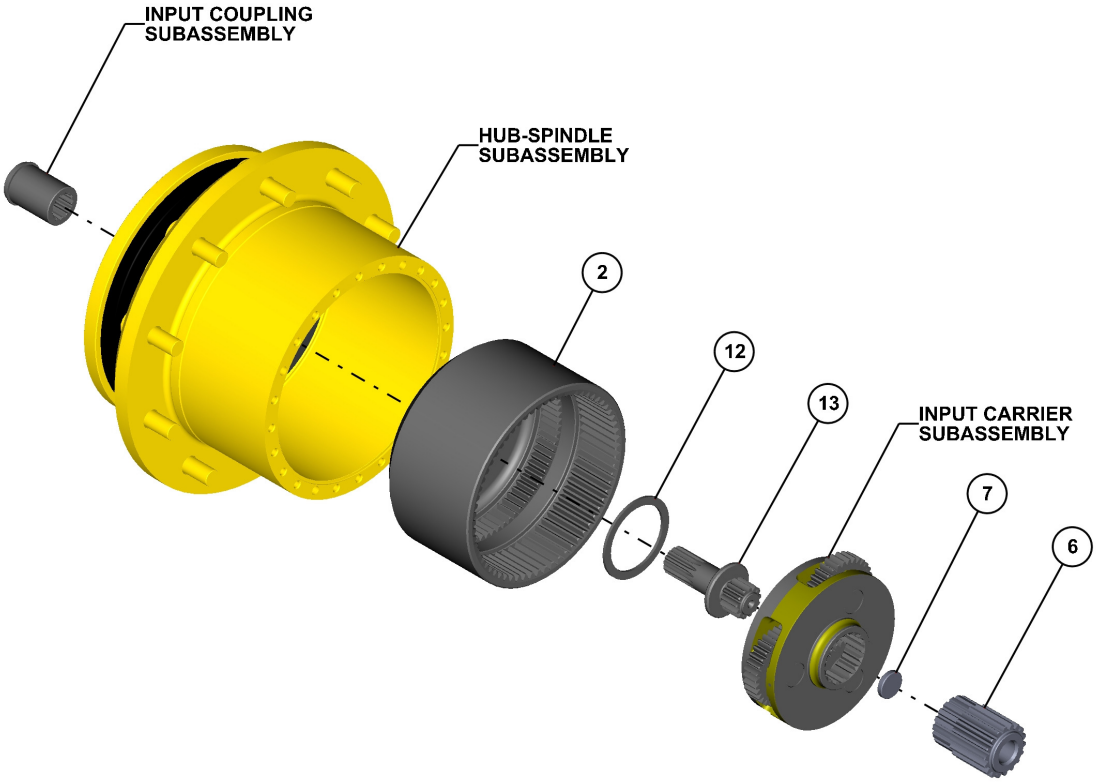

1. Install Internal Gear (2) onto Hub Spindle Sub Assembly.
2. Install Thrust Washer (12) onto the groove of Internal Gear (2).
3. Install Input Shaft (13) into the groove in the Internal Gear (2).
4. Install Input Carrier Sub Assembly onto the Internal Gear (2).

   NOTE: Insure the teeth of Carrier is properly meshing with the teeth of Input Shaft (13).
5. If necessary, grease and install Input Spacer (7).onto the bore of the Input Shaft (6).
6. Install Input Shaft with Input Spacer onto the Input Carrier Subassembly.

Continued on Next Page

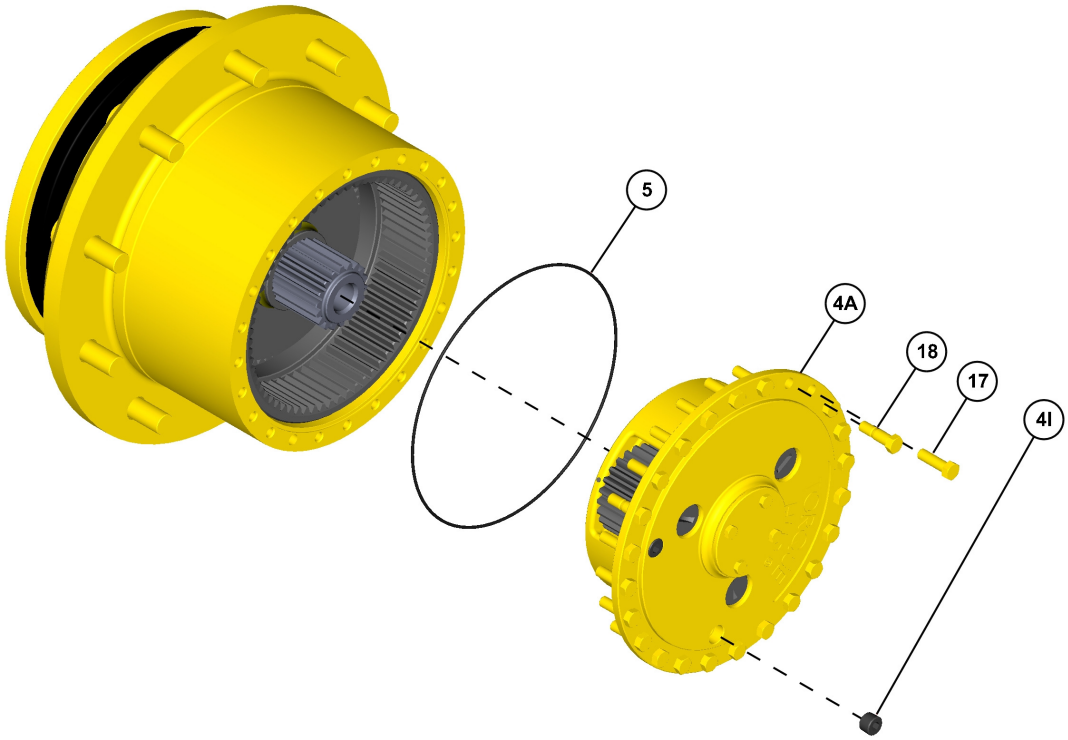

7. Grease and install O-Ring (5) onto the groove in the Hub (1G).

8. Install Output Carrier Subassembly onto the Hub-Spindle Assembly.

9. Turn unit over and install the Input Coupling Subassembly bore of the Spindle.

10. Tighten four Shoulder Bolts (18) onto the reamed holes of Hub (1G) to a torque of 45-47 ft-lbs, use Loctite 263.

11. Apply Loctite 263 and install twenty Hexagonal Bolts (17) to a torque of 45-47 ft-lbs.

12. Install Pipe Plug (4I) into Cover Carrier (4A) using thread sealant.

13. The unit should now be leak and roll checked as per instructions on page 5 and 6.

This concludes the Main Assembly.

Planetary Final Drive Service Manual

Assembly Drawing

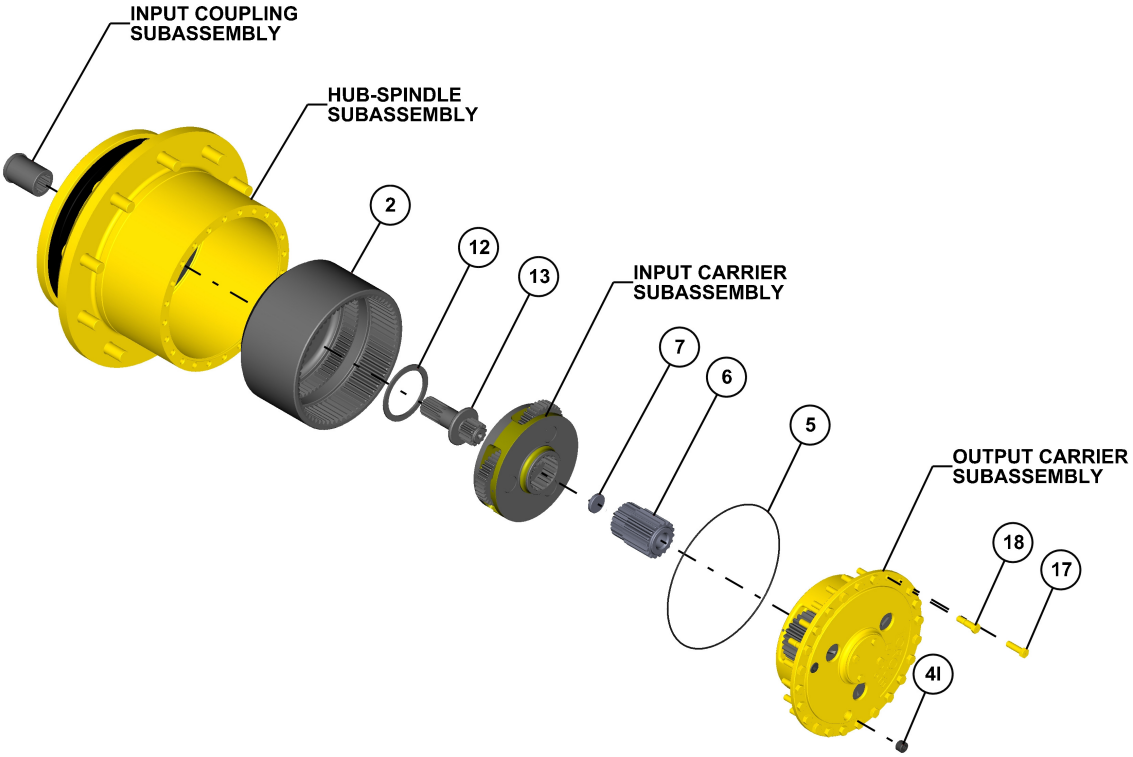

Planetary Final Drive Repair Instructions
Parts List

Number	Qty	Description
1A	1	SPINDLE
1B	1	LIP SEAL
1C	2	TAPERED BEARING CUP
1D	2	TAPERED BEARING CONE
1G	1	HOUSING
1H	1	STEEL SHIM
1I	1	BEARING CARRIER
1J	12	SOCKET BOLT
1L	2	MAGNETIC PIPE PLUG
1N	10	STUD
1Q	1	SEAL BOOT
2	1	INTERNAL GEAR
3A	1	CARRIER
3B	12	THRUST WASHER
3C	57	BEARING NEEDLE
3D	3	PIN ROLL
3E	3	PLANET SHAFT
3F	3	PLANET GEAR
4A	1	CARRIER
4B	12	THRUST WASHER
4C	108	BEARING NEEDLE
4D	3	THRUST WASHER
4E	3	PLANET SHAFT
4F	3	PLANET GEAR
4G	3	ROLL PIN
4H	3	O-RING
4I	2	MAGNETIC PIPE PLUG
4J	1	ID PLATE
4K	2	SCREW DRIVE
4M	4	HEXAGONAL BOLT
4P	1	COVER CAP
4S	1	O-RING
5	1	O_RING
6	1	SUN GEAR
7	1	INPUT SPACER
12	1	THRUST WASHER
13	1	INPUT SHAFT
17	20	HEXAGONAL BOLT

Number	Qty	Description
18	4	SHOULDER BOLT
19	1	COUPLING
20		INTERNAL RETAINING RING
21	1	EXTERNALRETAINING RING

T155655–BEARING CUP ASSEMBLY TOOL

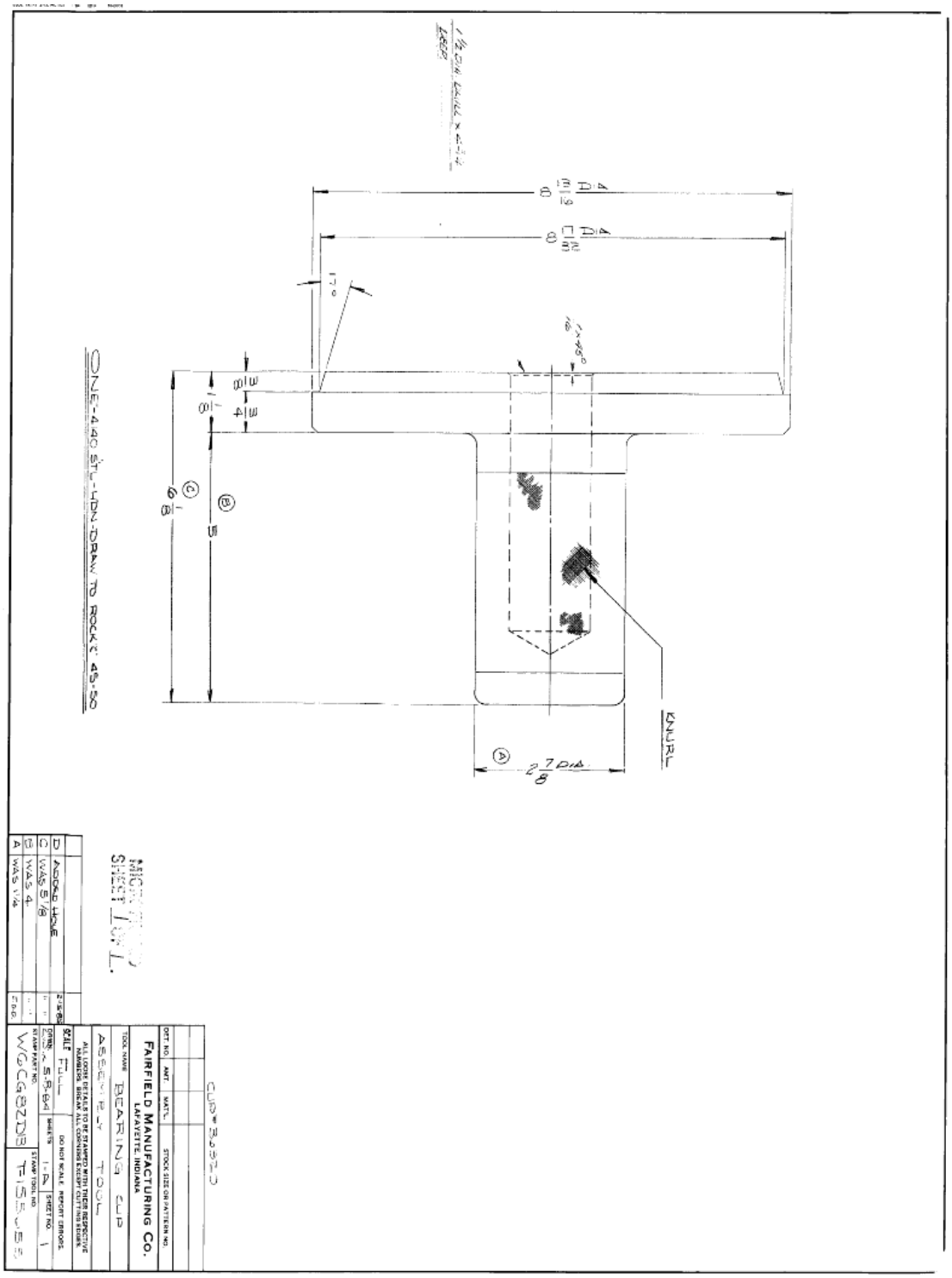

T148965– ASSEMBLY TORQUING FIXTURE TOOL

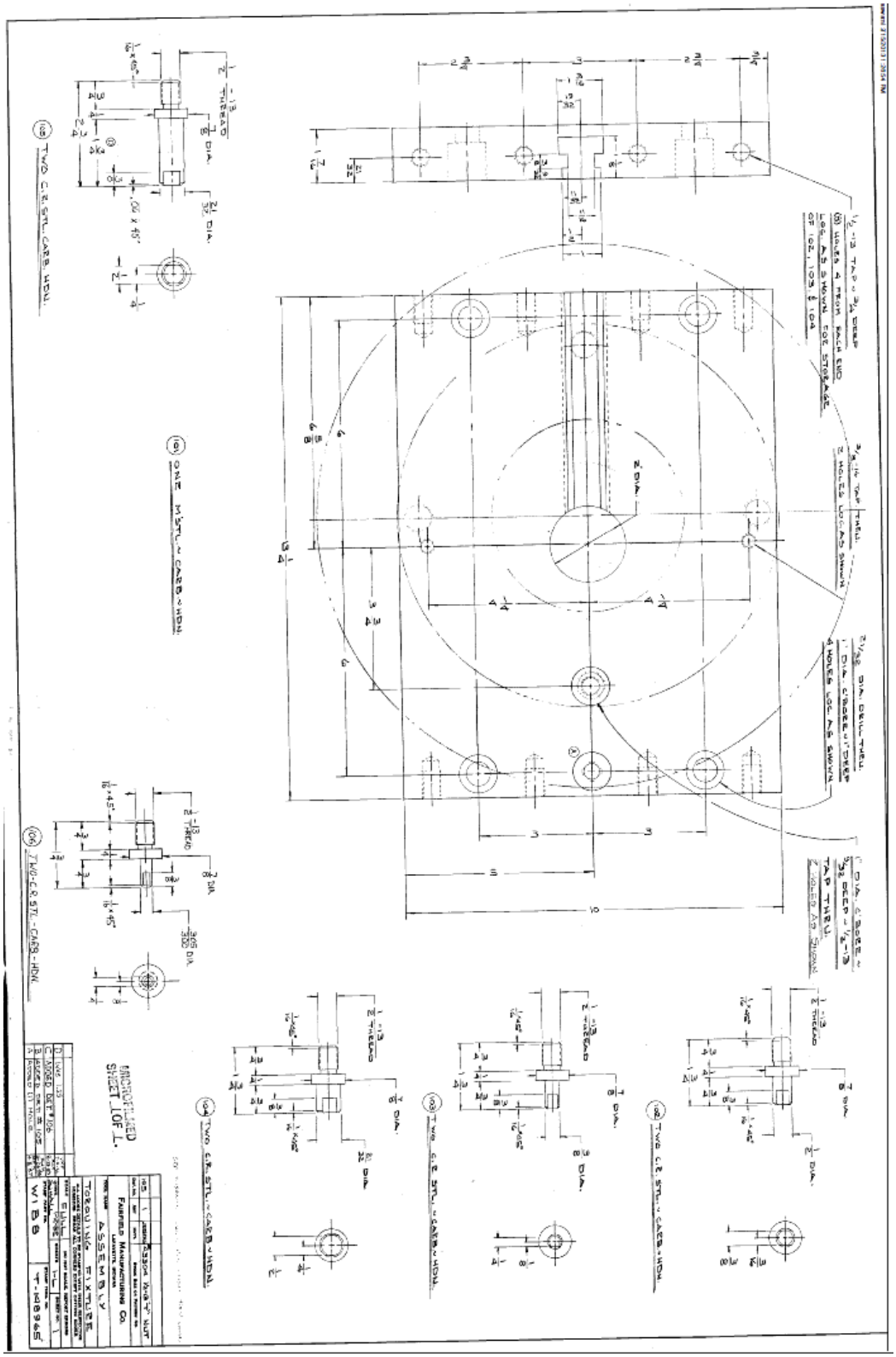

T160970– SEAL ASSEMBLY PRESSING TOOL

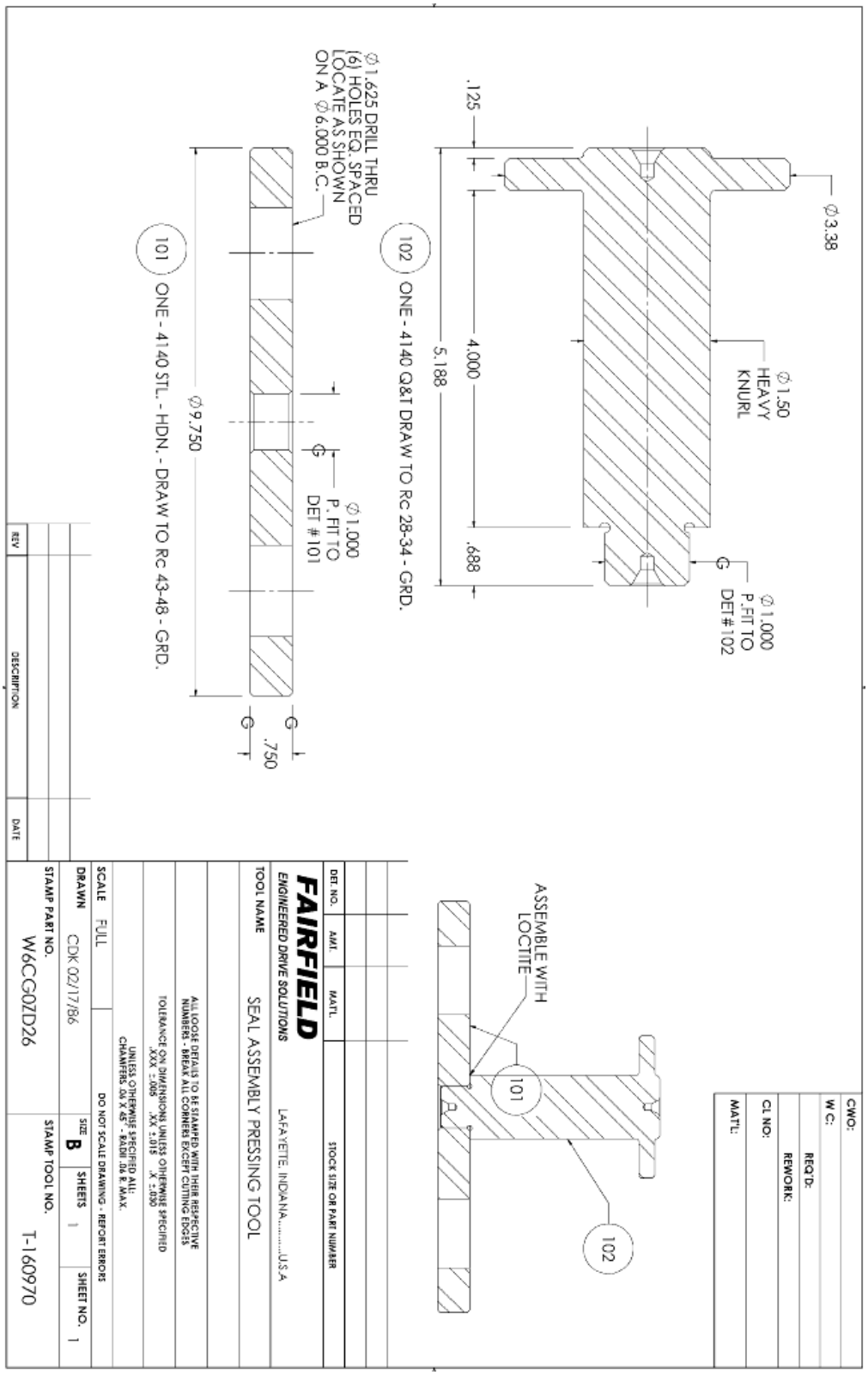

T160969– ASSEMBLY PRESSING TOOL

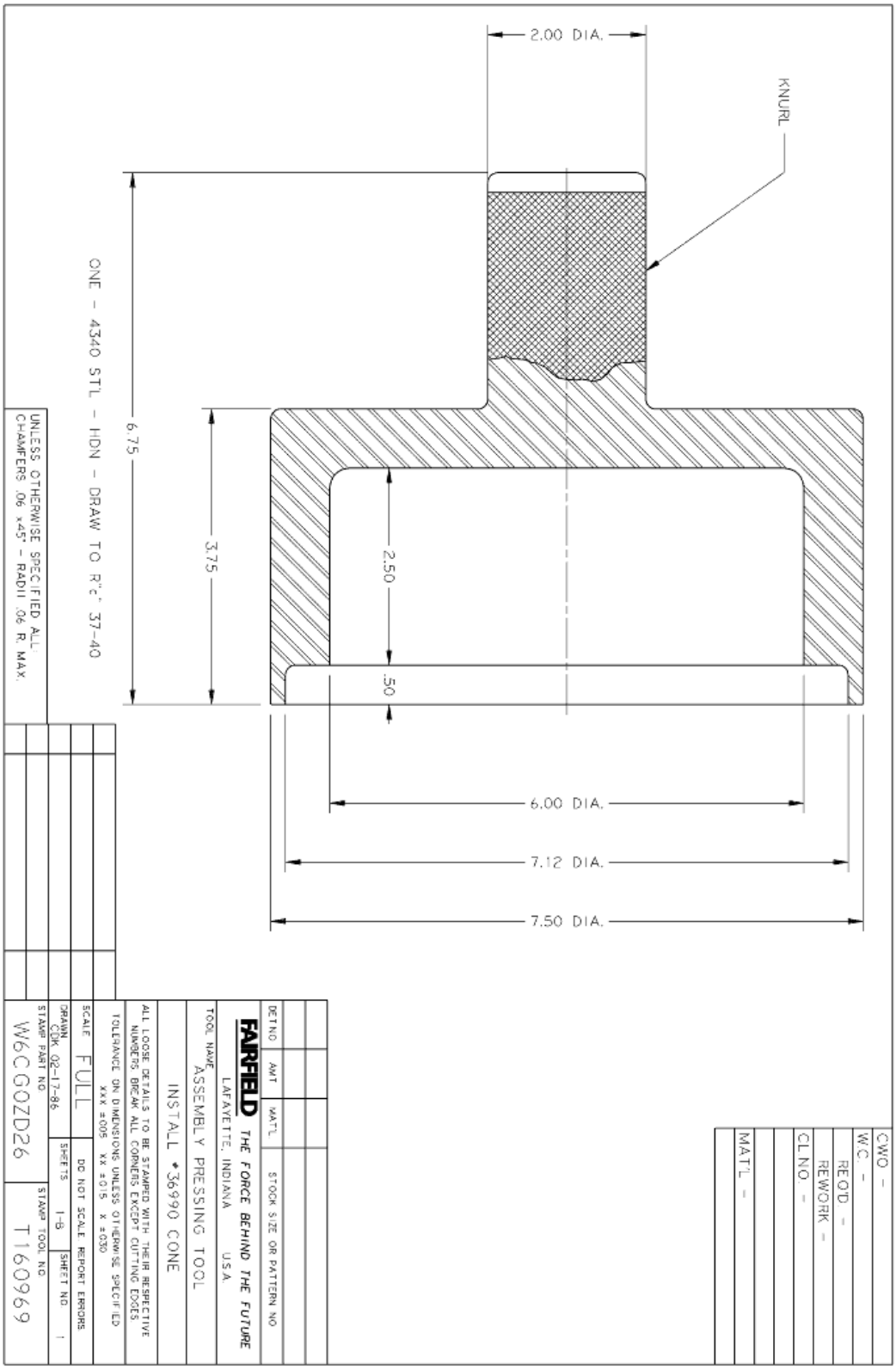

T160299– CRADLE FOR STAKING PINS

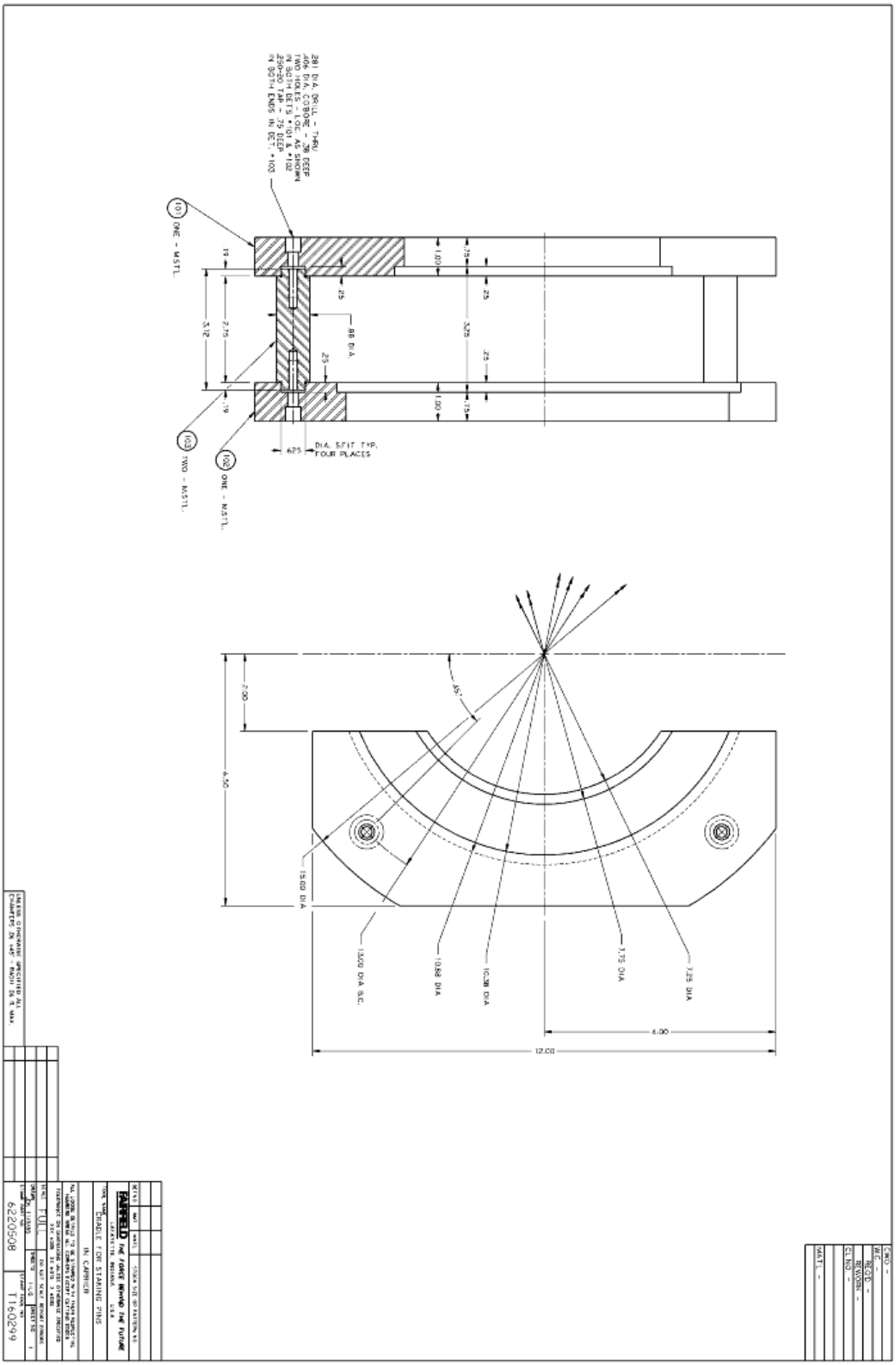

T159975– CRADLE FOR STAKING PINS

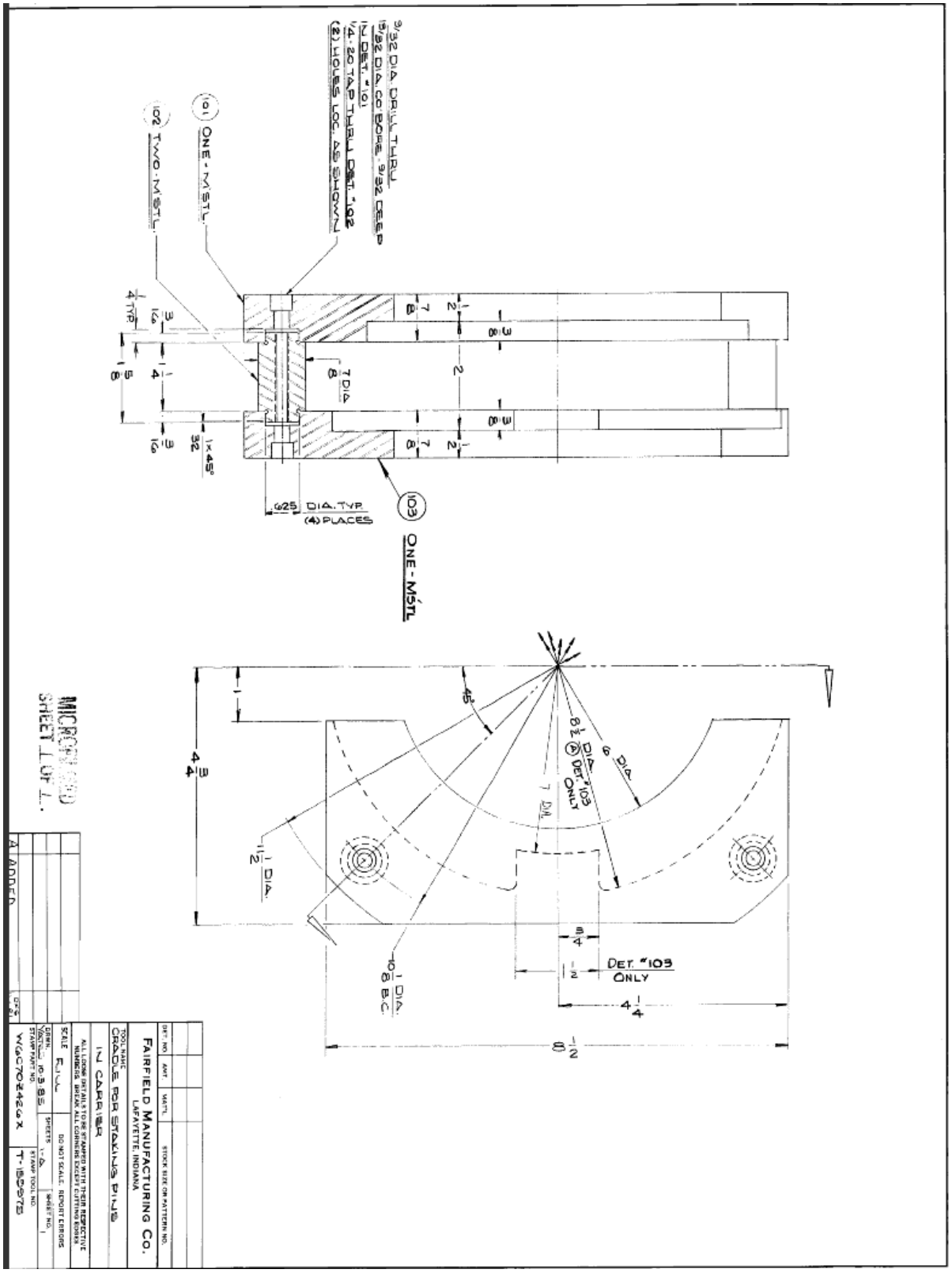

T211488– STUD FOR PRESSING FIXTURE

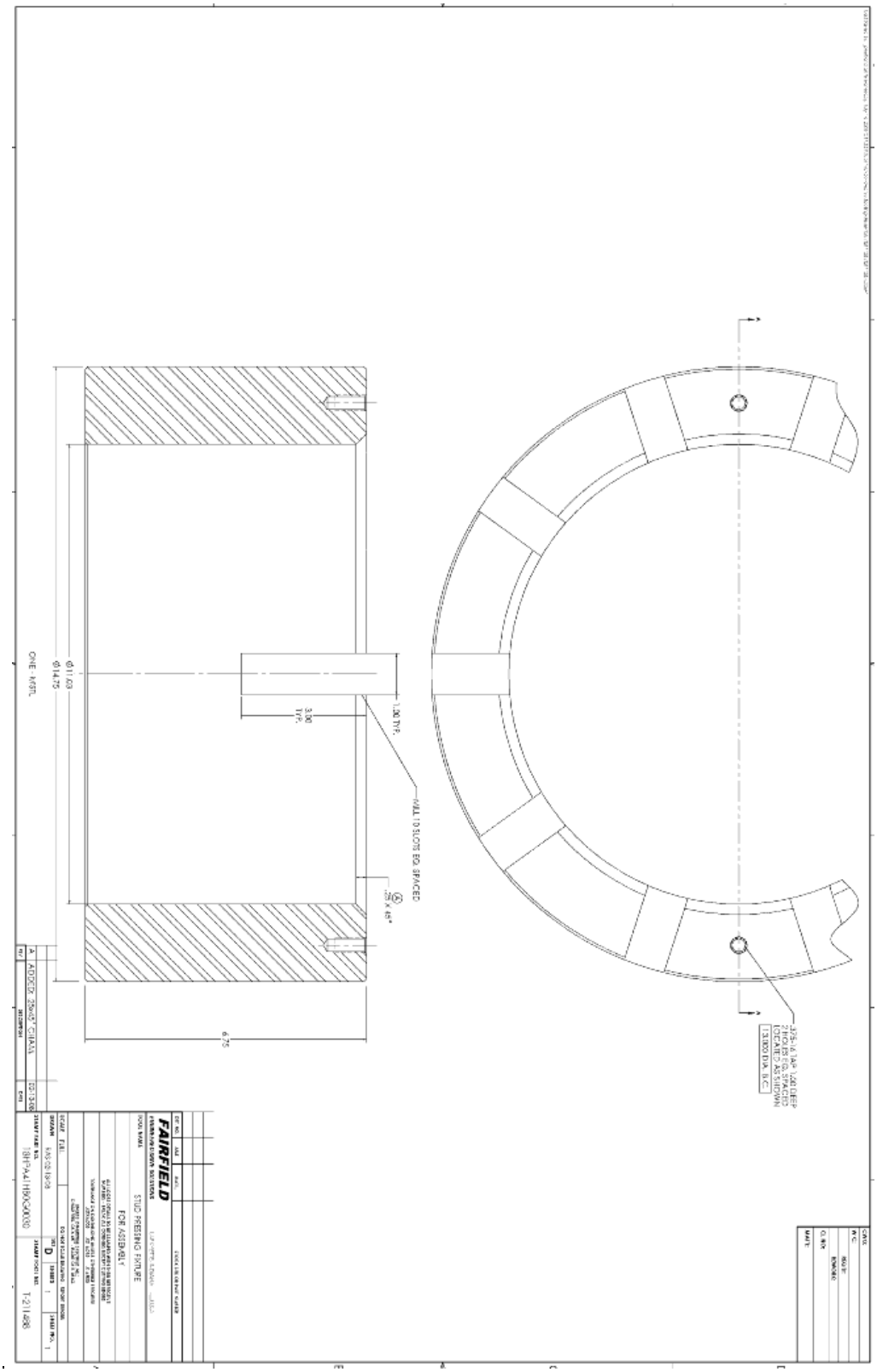

T170237– LEAK TEST TOOL

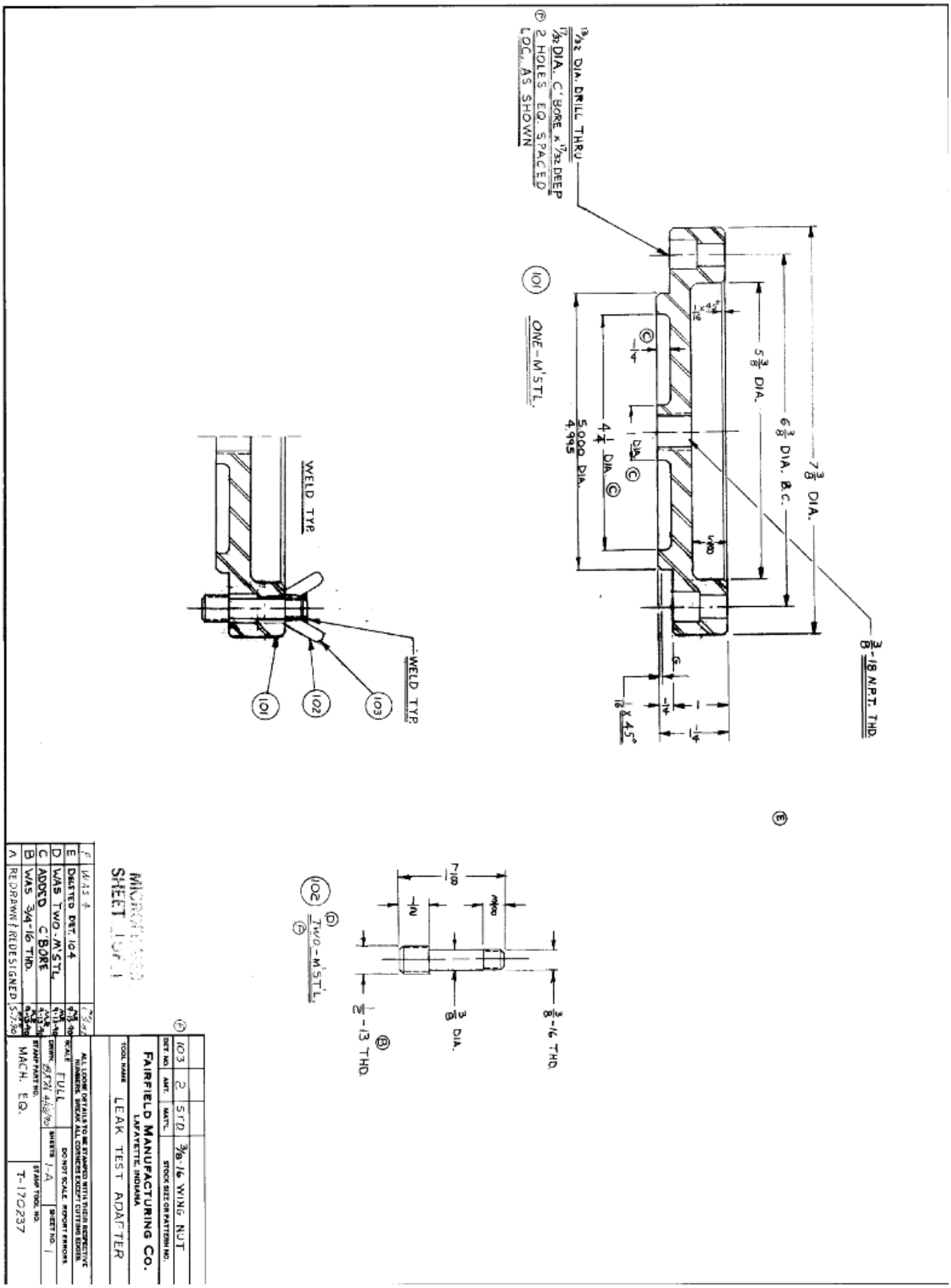

T223989– ROLL TEST TOOL

DET NO	AMT	MAT'L	STOCK SIZE OR PART NUMBER

FAIRFIELD MANUFACTURING CORPORATION

FAIRFIELD MANUFACTURING CORPORATION
P.O. BOX 7940
LAFAYETTE, INDIANA 47903 USA
www.fairfieldmfg.com

DESCRIPTION:

TOLERANCE ON DIMENSIONS WOS: .XXX ± .005 .XX ± .015 .X ± .030
UNLESS OTHERWISE SPECIFIED ALL CHAMFERS .04 X 45° - RADII .04 R. MAX.
DRAWN BY: WEIGHT: lbs. SCALE TO:

STAMP PART NO.

STAMP TOOL NO. T223989

SHEET 1/1

REV	DESCRIPTION	APPROVED	DATE

With more than 90 years of experience, Fairfield Manufacturing Co. Inc. has become the largest U.S. non-captive producer of gears, custom gear assemblies, planetary final drives and related gear products. Fairfield Manufacturing Co. Inc., headquartered in Lafayette, Indiana USA, is distinguished by our extensive design, manufacturing and applications engineering capabilities.
Our 500,000 square foot plant is a modern, fully equipped manufacturing facility that includes a full service heat treat department.

Our philosophy of synchronous engineering is a partnership that matches our best and brightest people with your people to evaluate your unique requirements, and develop products and assemblies that meet your needs.

For more information, contact Fairfield Manufacturing Co Inc. today.

Mailing Address	Fairfield Manufacturing Co. Inc. U.S. 52 South / P.O. Box 7940 Lafayette IN 47903-7940	
Shipping Address	2309 Concord Road Lafayette, IN 47909	
Fax	Main Applications Engineering Sales and Service	(765) 772-4001 (765) 772-4011 (765) 772-4010
E-mail	Applications Engineering Sales	apps@fairfieldmfg.com sales@fairfieldmfg.com
Website	www.oerlikon.com/fairfield	

Oerlikon Fairfield
U.S. 52 South / P.O. Box 7940
Lafayette, IN 47903 USA
765-772-4000
www.oerlikon.com/fairfield